Application

The FSD-123 combination fire smoke damper employs triple-V blades for point-of-origin control of fire and smoke in static and dynamic smoke management systems. The FSD-123 is qualified to 2,000 ft/min (10.2 m/s) and 4 in.wg. (1.0 kPa) and may be installed in vertical walls or partitions, or horizontally in floors or assemblies with fire resistance ratings up to 2 hours.

Standard Construction

Frame: 5" × 1" (127 × 25) galvanized steel hat channel with interlocking corner gusset. Equivalent to 13 gauge (2.4) channel frame. Low profile head and sill are used on sizes less than 13" (330) high.

Blades: 6" × 16 gauge (152 × 1.6) galvanized steel — triple-V.

Sleeve: 16" × 20 gauge (406 × 1.0) galvanized steel.

Axles: ½" (13) diameter plated steel hex.

Linkage: Concealed in frame.

Bearings: Stainless steel oilite, sleeve-type.

Seals: Silicone blade edge seals and flexible metal jamb seals.

Actuator: 120 VAC, power-open, spring-close, external mount.

Fire Closure Device: HS-10 (electric actuators)
PFV (pneumatic actuators)

Fire Closure Temperature: 165°F (75°C).

Minimum Size: 6" × 6" (152 × 152)

Maximum Size:

Single section:	36" × 48" (914 × 1219)
Vertical mount:	144" × 96" (3658 × 2438)
Horizontal mount:	108" × 48" (2743 × 1219)
Stainless steel (vertical/horizontal):	72" × 48" (1829 × 1219)

Options

☐ Alternate actuator:
- ☐ Internal mount (actuator in air-stream).
- ☐ 24 VAC ☐ 24 VDC** ☐ 230 VAC ☐ Pneumatic
- ☐ Modulating

☐ DRS-30 — Two temperature fire closure device. (Includes PI-50 switch package)

☐ Alternate factory installed sleeve:
- Gauge: ☐ 18 (1.3) ☐ 16 (1.6) ☐ 14 (2.0) ☐ 10 (3.5)
- Length: ☐ 20" (508) ☐ 24" (610) ☐ Other_____
- ☐ Side Plate ☐ No Sleeve (Actuator must be internally mounted)

☐ Transitions: ☐ Flanged
- ☐ Round ☐ Oval
- ☐ Duct connections: ☐ 1" (25) S-clip ☐ 1½" (38) S-clip
- ☐ DM25 ☐ DM35 ☐ S & Drive ☐ Ward

☐ Retaining angle systems: Gauge: ☐ 20 (1.0) ☐ 16 (1.6)
- Picture frame: ☐ SSPF (single-side) ☐ DSPF (2-sided)
- Individual angle sets: ☐ SS (single-side) ☐ DS (2-sided)

☐ Alternate fire closure temperature:
- ☐ 212°F (100°C) ☐ 250°F (121°C)
- ☐ 350°F (177°C).

☐ Duct smoke detector factory mounted and wired:
- ☐ D4120 (100-4,000 fpm [0.5-20.3 m/s])
- ☐ 2151 (0-3,000 fpm [0-15.2 m/s])

☐ Duct access door factory mounted in common sleeve.

☐ Remote control stations:
- ☐ RCP-1 (single) ☐ RCP-1K (single, key controlled)-
- ☐ RCP-1M (single, momentary switch)

☐ Generic mullion for oversized masonry or concrete wall openings.

☐ Type-304 stainless steel construction.

** Maximum Temperature: 250°F (121°C)

Information is subject to change without notice or obligation.

Ratings

UL 555 Fire Resistance Rating: 1½ hour (vertical and horizontal)

UL 555S Leakage Class: 3 [80 cfm/sq.ft. @ 4 in.wg.]
[(0.41 $m^3/s/m^2$ @ 1.0 kPa)]

UL HNLJ.V-5: Ventilation Duct Assemblies

Maximum Dynamic Closure Velocity: 2,000 fpm (10.2 m/s)

Maximum UL555S Rated Pressure: 4 in.wg. (1.0 kPa)

Maximum Temperature: 350°F (177°C)

Listings

UL 555 and 555S listing: R14981

CSFM listing: 3225-1404:110 and 3230-1404:111

New York City MEA listing: 295-98-E

Meets NFPA Standards: 90A, 92A, 92B and 101

Meets Building Code Standards: IBC, NBC, NFPA, SBC and UBC

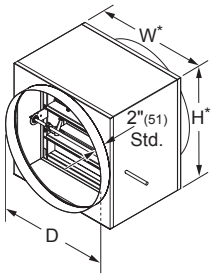

Type R (optional)
Round duct transitions are standard with D=W=H. (available with D<W and H)

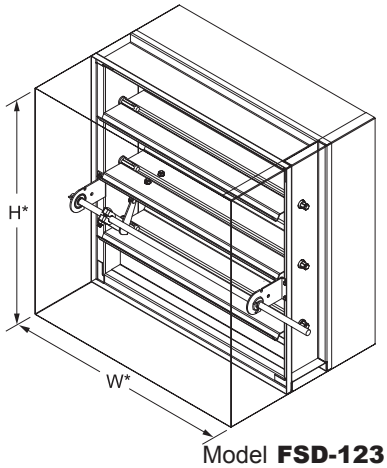

Model **FSD-123**
(standard)

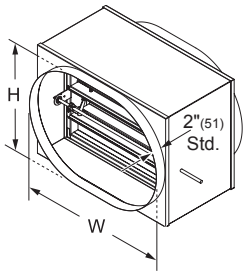

Type O (optional)
Oval duct transitions are standard with W and H equal to damper width and height dimensions. (available with W and H smaller than damper width and height)

*Damper dimensions furnished approximately 1/4" (6) undersize. (sleeve thickness not included)

NOTE: Dimensions in parentheses ( ) are millimeters.

C&S AIR PRODUCTS 5101 Blue Mound Road, Fort Worth, Texas 76106 www.csairproducts.com

Actuator and Sleeve Dimensional Data

The drawings and corresponding table illustrate the position of the damper when mounted in a factory sleeve and the relative space required for a given actuator. The standard mounting locations provide enough space for installation of retaining angles and duct connections.

	Damper Height	Actuator Model					
		FSLF120 FSLF24	FSNF120 FSNF24	GGD221 GGD121	ML4115 ML8115	331-4826	331-2998
F	6"-7"	5"	7"	9"	5"	9"	13"
	8"-9"	4"	7"	8"	4"	8"	12"
	10-11"	1"	4"	6"	1"	5"	9"
	12"-13"	0"	3"	5"	0"	4"	8"
	14"	0"	2"	4"	0"	4"	8"
	15"-16"	0"	1"	3"	0"	3"	7"
	17"	0"	3"	5"	0"	5"	9"
	18" and 23"	0"	0"	0"	0"	0"	3"
	19"-20" and 25"	0"	0"	0"	0"	0"	2"
	21"-22" and 24"	0"	0"	0"	0"	0"	0"
	26"-27"	0"	0"	0"	0"	0"	1"
	>27"	0"	0"	0"	0"	0"	0"
T	6" and 10"	3"	3"	3"	3"	3"	3"
	7" and 11"-12"	2"	2"	2"	2"	2"	2"
	8", 13"-14" and 21"	1"	1"	1"	1"	1"	1"
	9", 15"-17" and 20"	0"	0"	0"	0"	0"	0"
	18"-19"	0"	1"	1"	0"	1"	1"
	22"-23" and >24"	0"	0"	0"	0"	0"	0"
	24"	0"	0"	0"	0"	0"	1"
S	All	4-1/2"	4-1/2"	4-1/2"	4-1/2"	5"	7-1/4"
X	<8"	4"	4"	4"	4"	4"	4"
	≥8"	2-5/8"	2-5/8"	2-5/8"	2-5/8"	2-5/8"	2-5/8"
J	<8"	2"	2"	2"	2"	2"	2"
	≥8"	3-3/8"	3-3/8"	3-3/8"	3-3/8"	3-3/8"	3-3/8"

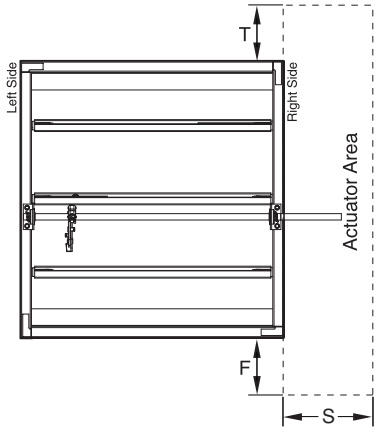

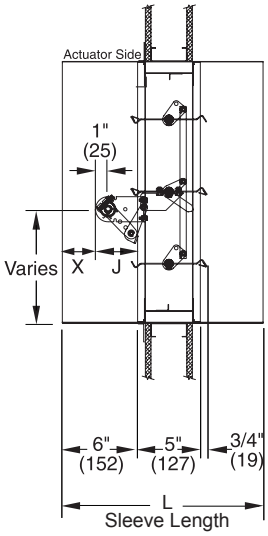

NOTE:
1. Sleeve length "L" = wall/floor thickness + 10" (254). Standard sleeve length "L" = 16" (406).
2. Damper may be rotated 180° to position actuator area on the left side.
3. The entire damper frame is not required to be installed within the wall, partition or floor. However, the closed plane of the damper blades must be inside the wall, partition or floor.
4. Dimensions for FSNF120/FSNF24 apply to FSAF120/FSAF24.
5. Dimensions for ML4115/ML8115 apply to MS4209/MS8209.
6. For dimensions on actuators not shown above, contact factory.

Airflow Performance Data

Pressure Loss vs. Velocity

Figure 5.3 — Ducted Inlet and Outlet

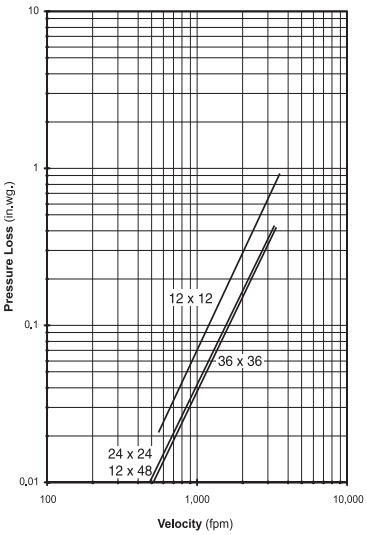

Figure 5.2 — Ducted Inlet

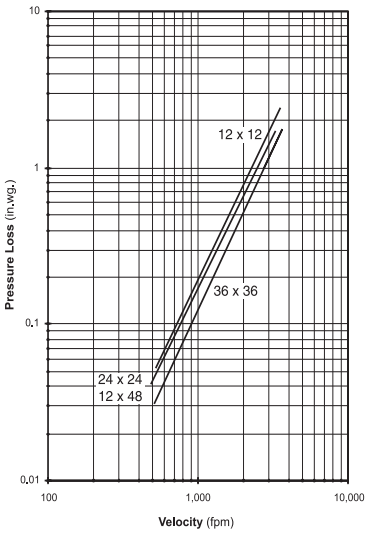

Figure 5.5 Plenum Mount

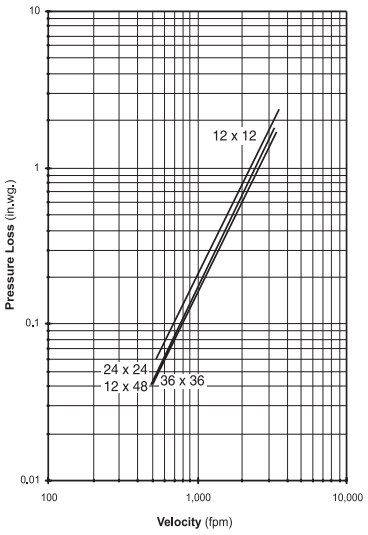

Pressure drop testing was performed in accordance with AMCA Standard 500-D using the three configurations shown. All data has been corrected to represent air density of 0.075 lb/ft. Actual pressure drop in any ducted HVAC system is a combination of many elements. This information, along with analysis of other system influences, should be used to estimate actual pressure losses for a damper installed in a given HVAC system.

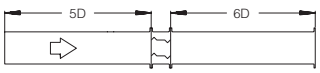

Ducted Inlet and Outlet

AMCA Figure 5.3 Illustrates a fully ducted damper. This configuration represents the lowest pressure drop of the three test configurations because entrance and exit losses are minimized by straight duct runs upstream and downstream of the damper.

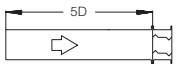

Ducted Inlet

AMCA Figure 5.2 Illustrates a ducted damper exhausting air into an open area. This configuration has a lower pressure drop than Figure 5.5 because entrance losses are minimized by a straight duct run upstream of the damper.

Plenum Mount

AMCA Figure 5.5 Illustrates a plenum mounted damper. This configuration has the highest pressure drop because of extremely high entrance and exit losses due to the sudden changes of area in the system.

Information is subject to change without notice or obligation.

NOTE: Dimensions in parentheses ( ) are millimeters.

C&S AIR PRODUCTS 5101 Blue Mound Road, Fort Worth, Texas 76106 www.csairproducts.com